SYM	REVISIONS	APPROVED	DATE
1	INITIAL DWG PILOT RELEASE		11-4-81

D-8000-5058-S

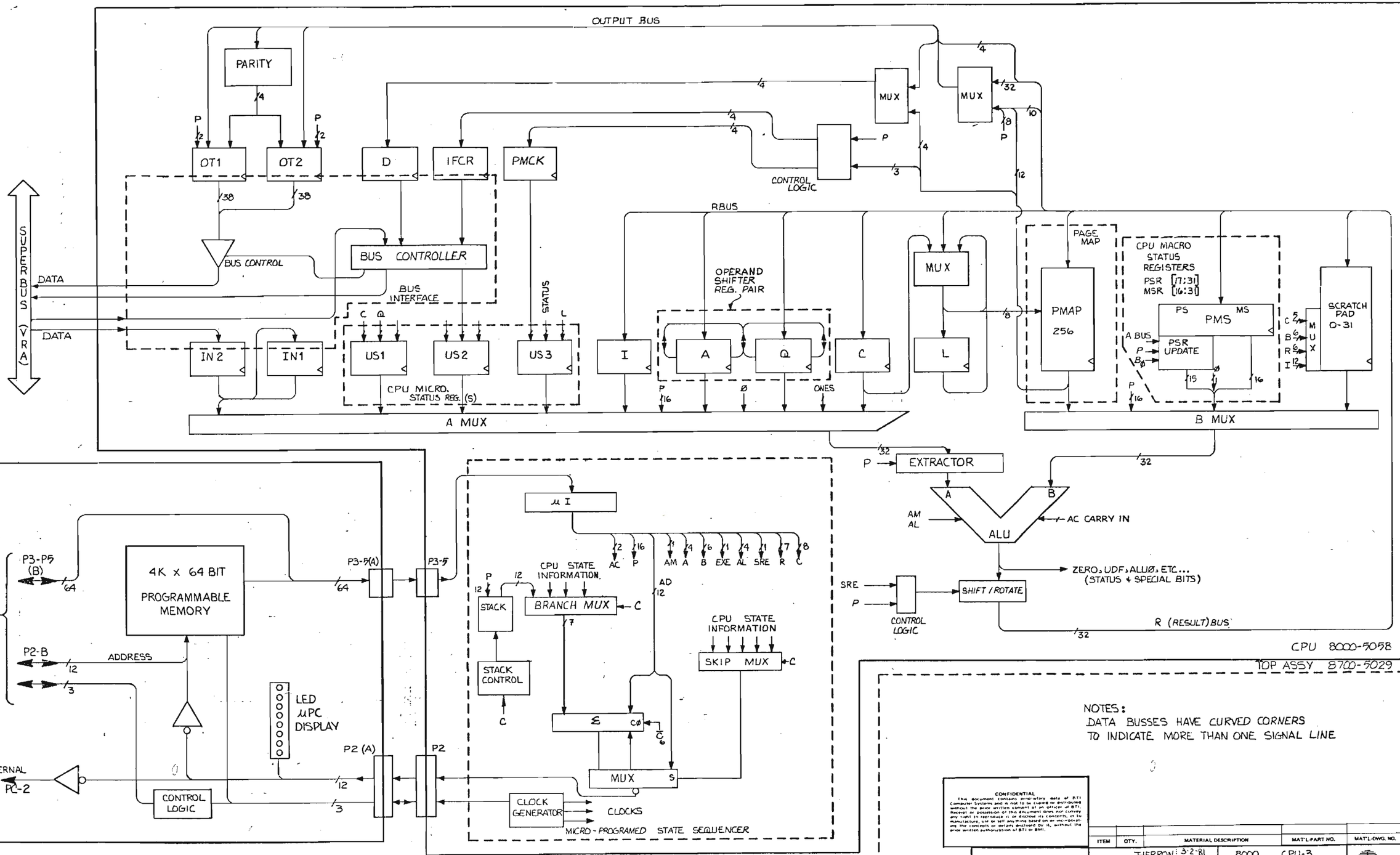

NOTES:
DATA BUSSES HAVE CURVED CORNERS
TO INDICATE MORE THAN ONE SIGNAL LINE

CONFIDENTIAL
This document contains proprietary data of BTI Computer Systems and is not to be copied or distributed without the prior written consent of an officer of BTI. Receipt or possession of this document does not convey any right to reproduce it or disclose its contents, or to manufacture, use or sell anything based on or incorporating the concepts or details enclosed by it, without the prior written authorization of BTI or BMI.

DO NOT SCALE THIS DRAWING
UNLESS OTHERWISE SPECIFIED
DIMENSIONS ARE IN INCHES
TOLERANCES .XX ± .02 .XXX ± .005

ITEM	QTY.	MATERIAL DESCRIPTION	MAT'L-PART NO.	MAT'L-DWG. NO.	MAT'L-SPEC.

DRAWN BY	THERRON 3-2-81 DATE	TITLE 8000 CPU-3 BLOCK DIAGRAM	BASIC Timesharing Sunnyvale, California 94086
ENGINEER			
RELEASE TO PROD.		NEXT ASSEMBLY 8700-5029	PART NUMBER 8000-5058
SUPERSEDES DWG.		FINISH — SCALE —	D-8000-5058-S

REV 1 SHEET 13 OF 13

PILOT RUN COPY

SYM	REVISIONS	APPROVED	DATE
1	PILOT RELEASE	WG CB	12/10/80

D-8000-5058-1

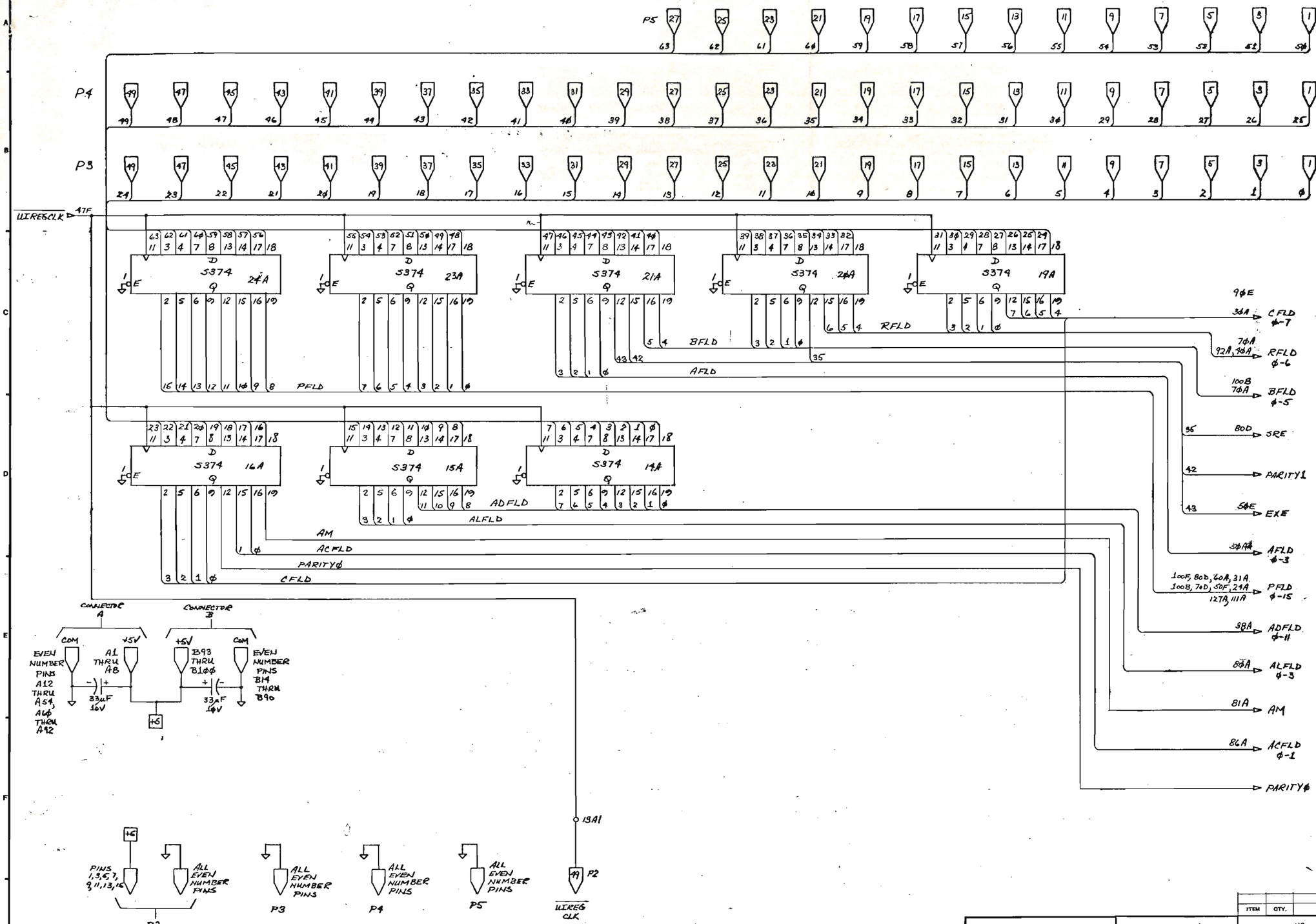

RUN COPY
PILOT RELEASE

CONFIDENTIAL
This document contains proprietary data of BTI Computer Systems and is not to be copied or distributed without the prior written consent of an officer of BTI. Receipt or possession of this document does not convey any right to reproduce it or disclose its contents, or to manufacture, use or sell anything based on or incorporating the concepts or details disclosed herein, without the prior written authorization of BTI or BMC.

DO NOT SCALE THIS DRAWING
UNLESS OTHERWISE SPECIFIED
DIMENSIONS ARE IN INCHES
TOLERANCES .XX ± .02 .XXX ± .008

ITEM	QTY.	MATERIAL DESCRIPTION	MAT'L-PART NO.	MAT'L-DWG. NO.	MAT'L-SPEC.

DRAWN BY WG	DATE	SCHEMATIC CPU3	BASIC Timesharing, Sunnyvale, California 94086
ENGINEER WG		TITLE CPU, MICROINSTRUCTION REGISTER	
RELEASE TO PROD.		NEXT ASSEMBLY	PART NUMBER 8000-5058
SUPERSEDES DWG.		FINISH — SCALE —	D8000-5058-5

REV 1 SHEET 1 OF 12

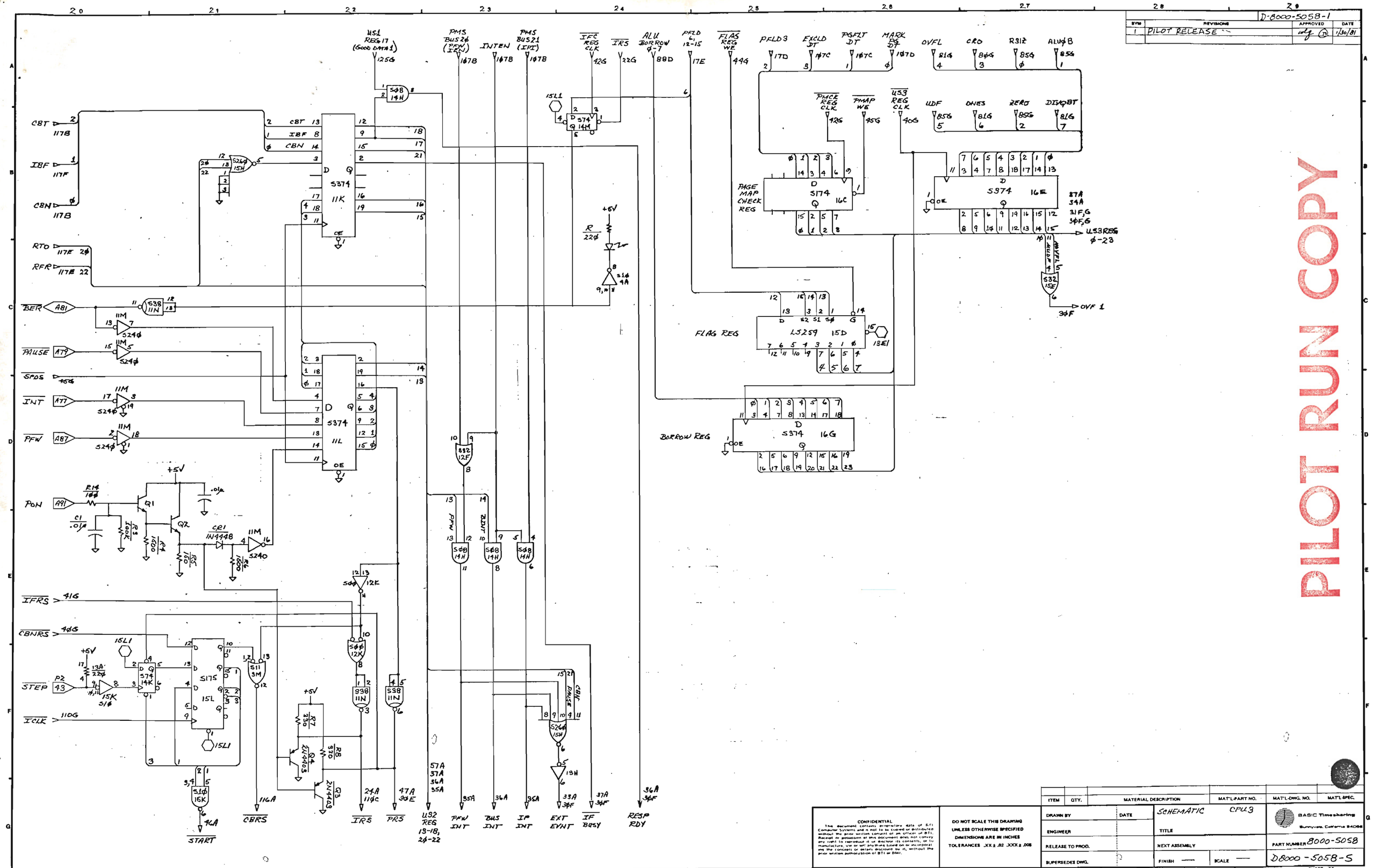
D-8000-5058-1
SYM
REVISIONS
APPROVED
DATE
1
PILOT RELEASE
11/30/81
PILOT RUN COPY
U51 REG 17 (GOOD DATA 1)
PMS BUS 26 (PFW INT)
INTEN
PMS BUS 21 (IPI)
IFC REG CLK
IRS
ALU BORROW 0-7
PFLD 6, 12-15
FLAG REG WE
PFLD3
EXCLD DT
PGFLT DT
MARK PG DT
OVFL
CRO
R312
ALU0B
PMCE REG CLK
PMAP WE
U53 REG CLK
UDF
ONES
ZERO
DISQBT
CBT
IBF
CBN
RTO
RFR
BER
PAUSE
SPDS
INT
PFW
PON
IFRS
CBNRS
STEP
ICLK
PAGE MAP CHECK REG
FLAG REG
BORROW REG
U53 REG 0-23
OVF 1
CBRS
IRS
PRS
U52 REG 13-18, 20-22
PFW INT
BUS INT
IP INT
EXT EVNT
IF BUSY
RESP RDY
START
CONFIDENTIAL
DO NOT SCALE THIS DRAWING UNLESS OTHERWISE SPECIFIED
DIMENSIONS ARE IN INCHES
TOLERANCES .XX ± .02 .XXX ± .005
ITEM
QTY.
MATERIAL DESCRIPTION
MAT'L PART NO.
MAT'L DWG. NO.
MAT'L SPEC.
DRAWN BY
DATE
ENGINEER
RELEASE TO PROD.
SUPERSEDES DWG.
SCHEMATIC
CPU3
TITLE
NEXT ASSEMBLY
FINISH
SCALE
BASIC Timesharing
Sunnyvale, California 94086
PART NUMBER 8000-5058
D8000-5058-S
REV 1
SHEET 2 OF 12

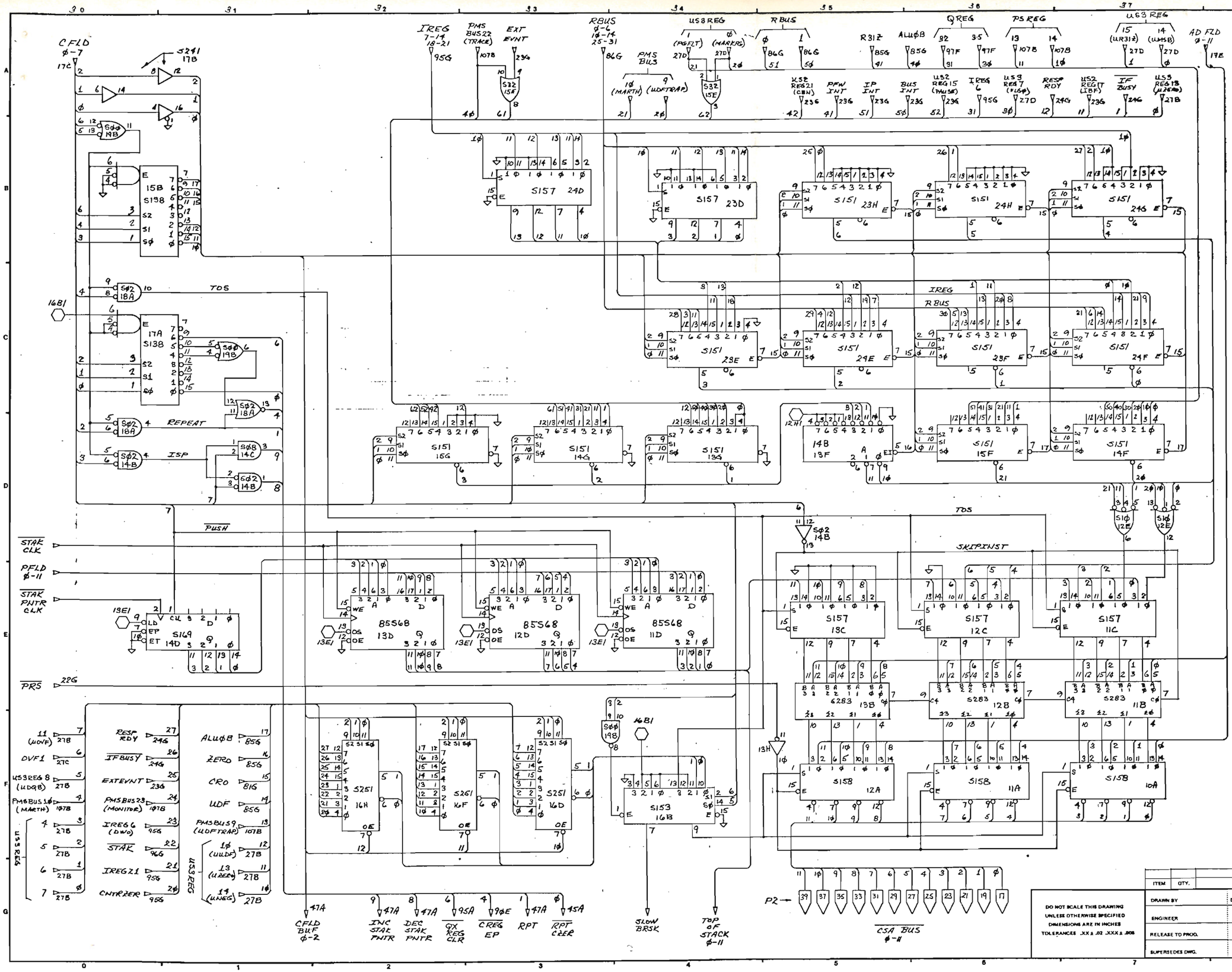

SYM	REVISIONS	APPROVED	DATE
1	PILOT RELEASE		1/30/81

D-8000-5058-1

PILOT

CONFIDENTIAL
This document contains proprietary data of BTI Computer Systems and is not to be copied or distributed without the prior written consent of an officer of BTI. Receipt or possession of this document does not convey any right to reproduce it or disclose its contents, or to manufacture, use or sell anything based on or incorporating the concepts or details disclosed by it, without the prior written authorization of BTI or BMI.

ITEM	QTY.	MATERIAL DESCRIPTION	MAT'L-PART NO.	MAT'L-DWG. NO.	MAT'L-SPEC.

DO NOT SCALE THIS DRAWING UNLESS OTHERWISE SPECIFIED
DIMENSIONS ARE IN INCHES
TOLERANCES .XX ± .02 .XXX ± .005

DRAWN BY | DATE
ENGINEER
RELEASE TO PROD.
SUPERSEDES DWG.

SCHEMATIC CPU3
TITLE
NEXT ASSEMBLY
FINISH — SCALE —

BASIC Timesharing
Sunnyvale, California 94086

PART NUMBER 8000-5058
D8000-5058-S
REV 1 SHEET 3 OF 12

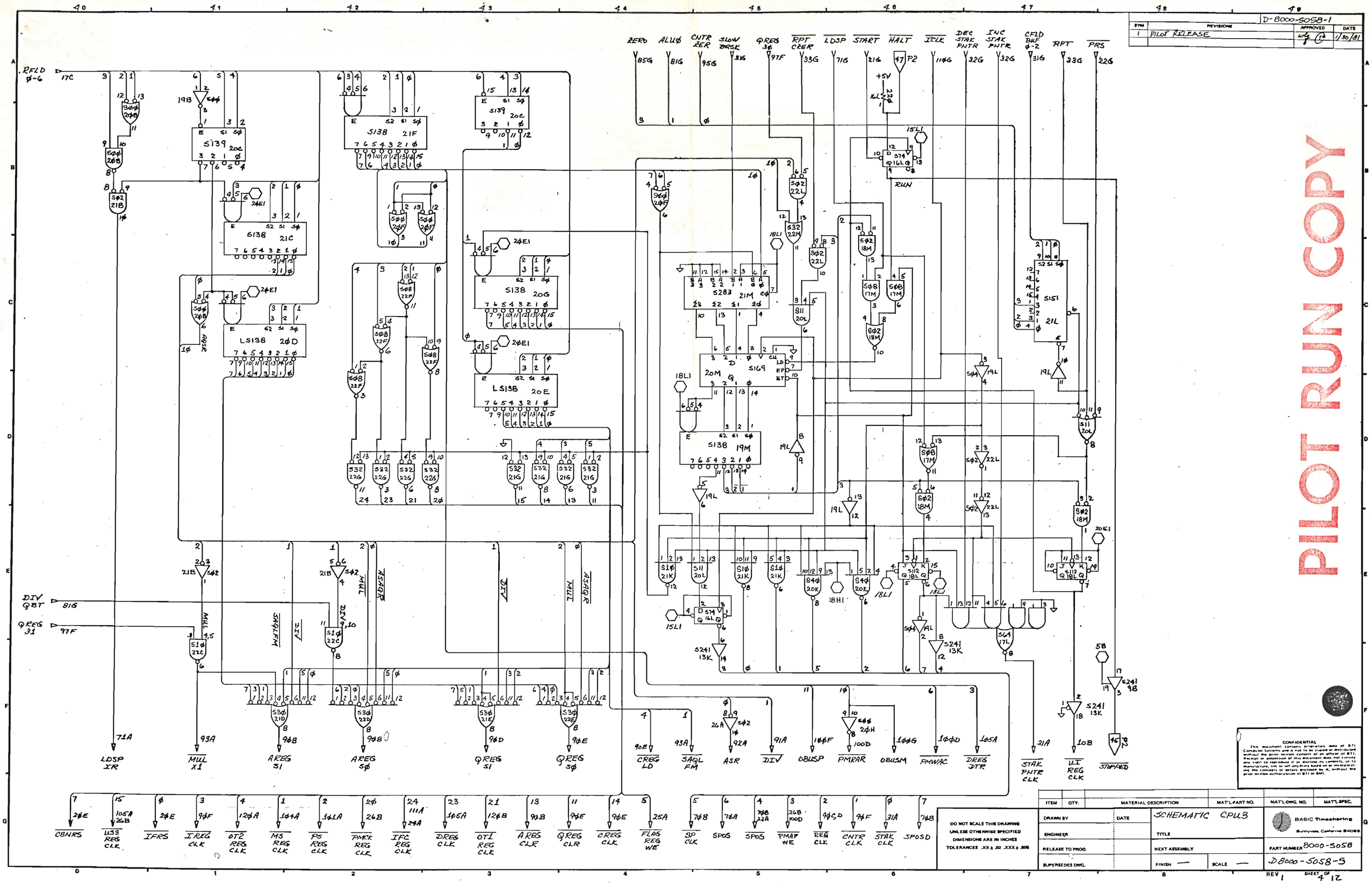
D-8000-5058-1
SYM
REVISIONS
APPROVED
DATE
1
PILOT RELEASE
1/30/81
ZERO
ALUØ
CNTR ZER
SLOW DRSK
QREG 3Ø
RPT CRER
LDSP
START
HALT
ICLK
DEC STAK PNTR
INC STAK PNTR
CFLD BUF Ø-2
RPT
PRS
RFLD Ø-6
DIV QBT
QREG 31
LDSP IR
MUL X1
AREG S1
AREG SØ
QREG S1
QREG SØ
CREG LD
SAQL FM
ASR
DIV
OBUSP
PMRAR
OBUSM
PMWAC
DREG DTR
STAK PNTR CLK
UI REG CLK
STOPPED
CBNRS
USB REG CLK
IFRS
IREG CLK
OT2 REG CLK
MS REG CLK
PS REG CLK
PMCK REG CLK
IFC REG CLK
DREG CLK
OTI REG CLK
AREG CLR
QREG CLR
CREG CLK
FLAG REG WE
SP CLK
SPOS
SPOS
PMAP WE
REG CLK
CNTR CLK
STAK CLK
SPOSD
RUN
PILOT RUN COPY
CONFIDENTIAL
This document contains proprietary data of BTI Computer Systems and is not to be copied or distributed without the prior written consent of an officer of BTI. Receipt or possession of this document does not convey any right to reproduce it or disclose its contents, or to manufacture, use or sell anything based on or incorporating the concepts or details disclosed in it, without the prior written authorization of BTI or BMI.
ITEM
QTY.
MATERIAL DESCRIPTION
MAT'L-PART NO.
MAT'L-DWG. NO.
MAT'L-SPEC.
DO NOT SCALE THIS DRAWING UNLESS OTHERWISE SPECIFIED
DIMENSIONS ARE IN INCHES
TOLERANCES .XX ± .02 .XXX ± .005
DRAWN BY
DATE
ENGINEER
RELEASE TO PROD.
SUPERSEDES DWG.
SCHEMATIC CPU3
TITLE
NEXT ASSEMBLY
FINISH —
SCALE —
BASIC Timesharing
Sunnyvale, California 94086
PART NUMBER 8000-5058
D8000-5058-5
REV 1
SHEET 4 OF 12

SYM	REVISIONS	APPROVED	DATE
1	PILOT RELEASE	[illegible]	1/20/81

D-8000-5058-1

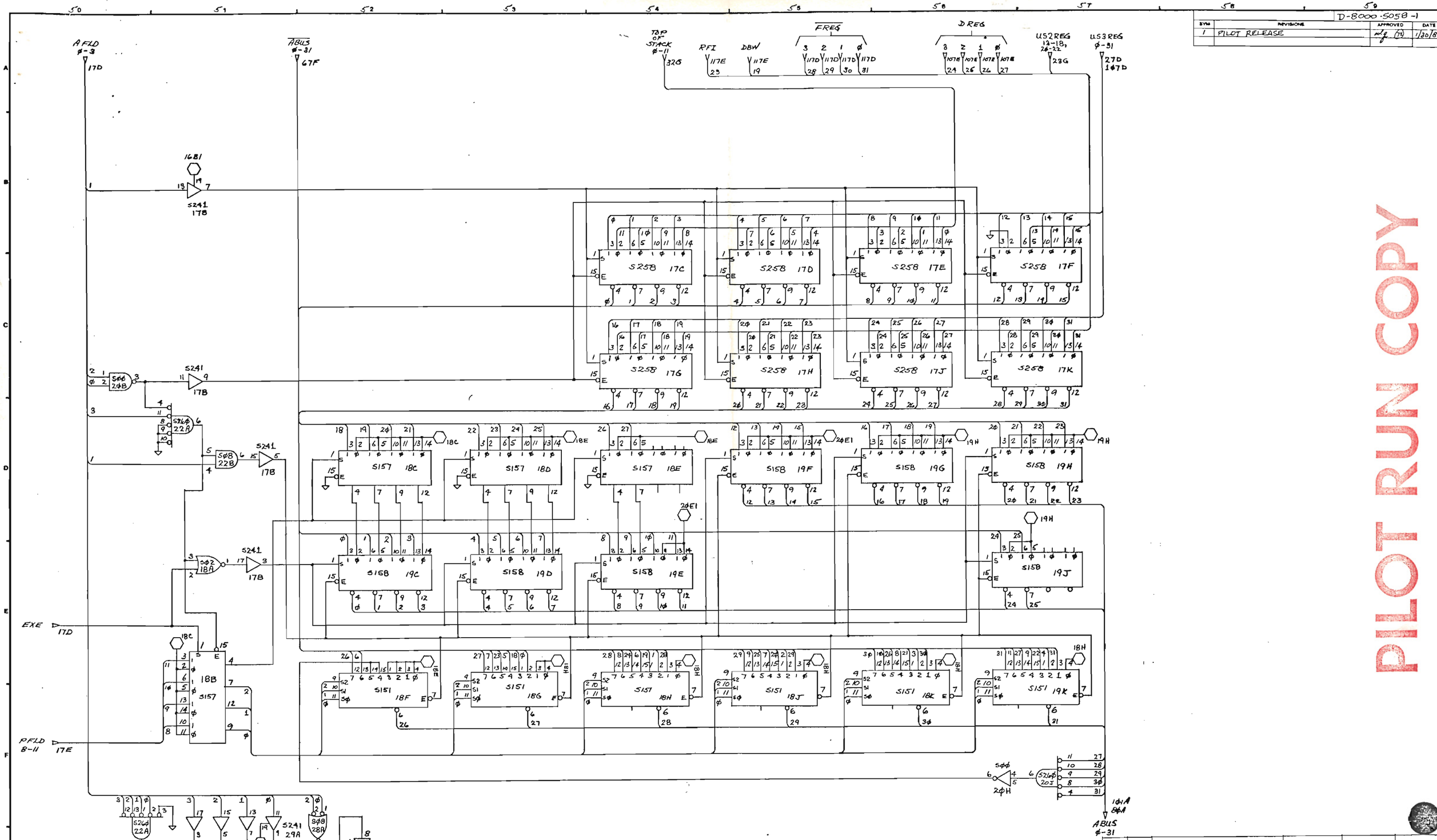

PILOT RUN COPY

ITEM	QTY.	MATERIAL DESCRIPTION	MAT'L-PART NO.	MAT'L-DWG. NO.	MAT'L-SPEC.

CONFIDENTIAL
This document contains proprietary data of BTI Computer Systems and is not to be copied or distributed without the prior written consent of an officer of BTI. Receipt or possession of this document does not convey any right to reproduce it or disclose its contents, or to manufacture, use or sell anything described in it or otherwise use the concepts or details disclosed by it, without the prior written authorization of BTI or BMI.

DO NOT SCALE THIS DRAWING
UNLESS OTHERWISE SPECIFIED
DIMENSIONS ARE IN INCHES
TOLERANCES .XX ± .02 .XXX ± .005

DRAWN BY	DATE	SCHEMATIC CPU3 A BUS FIELD EXTRACTOR AND UPPER MUX	BASIC Timesharing Sunnyvale, California 94086
ENGINEER			
RELEASE TO PROD.		NEXT ASSEMBLY	PART NUMBER 8000-5058
SUPERSEDES DWG.		FINISH — SCALE —	D8000-5058-5

REV 1 SHEET 5 OF 12

SYM	REVISIONS	APPROVED	DATE
1	PILOT RELEASE	wlg (TH)	12/2/80

D-8000-5058-1

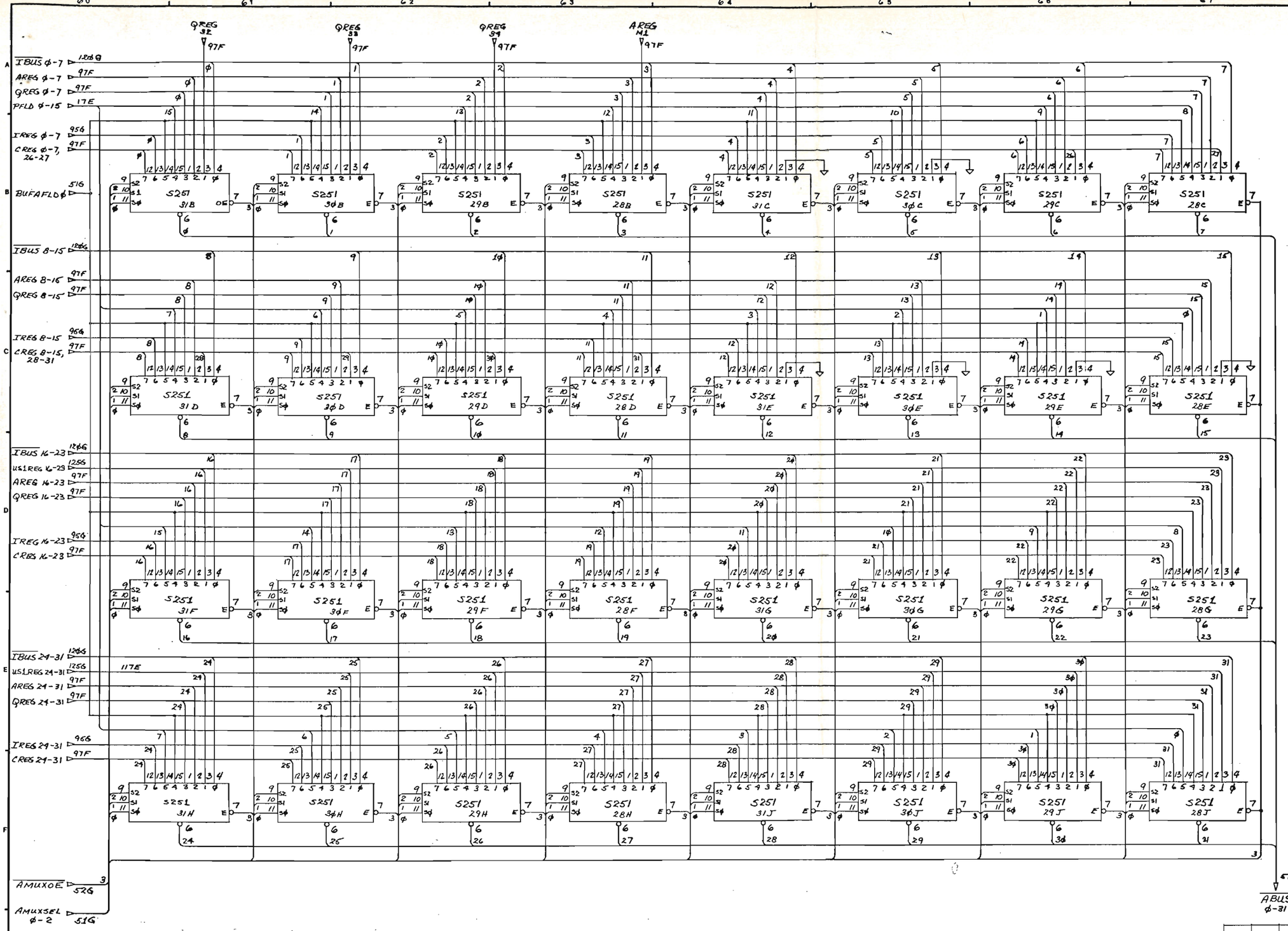

PILOT RUN COPY

ITEM	QTY.	MATERIAL DESCRIPTION	MAT'L-PART NO.	MAT'L-DWG. NO.	MAT'L-SPEC.

CONFIDENTIAL

This document contains proprietary data of BTI Computer Systems and is not to be copied or distributed without the prior written consent of an officer of BTI. Receipt or possession of this document does not convey any right to reproduce it or disclose its contents, or to manufacture, use or sell anything based on or incorporating the concepts or details disclosed by it, without the prior written authorization of BTI or BNI.

DO NOT SCALE THIS DRAWING
UNLESS OTHERWISE SPECIFIED
DIMENSIONS ARE IN INCHES
TOLERANCES .XX ± .02 .XXX ± .005

DRAWN BY	DATE	SCHEMATIC CPU3 LOWER A Bus Mux (TITLE)	BASIC Timesharing, Sunnyvale, California 94086
ENGINEER			
RELEASE TO PROD.		NEXT ASSEMBLY	PART NUMBER 8000-5058
SUPERSEDES DWG.		FINISH — SCALE —	D8000-5058-5

REV 1 SHEET 6 OF 12

SYM	REVISIONS	APPROVED	DATE
1	PILOT RELEASE	wlg TB	12/18/80

D-8000-5058-1

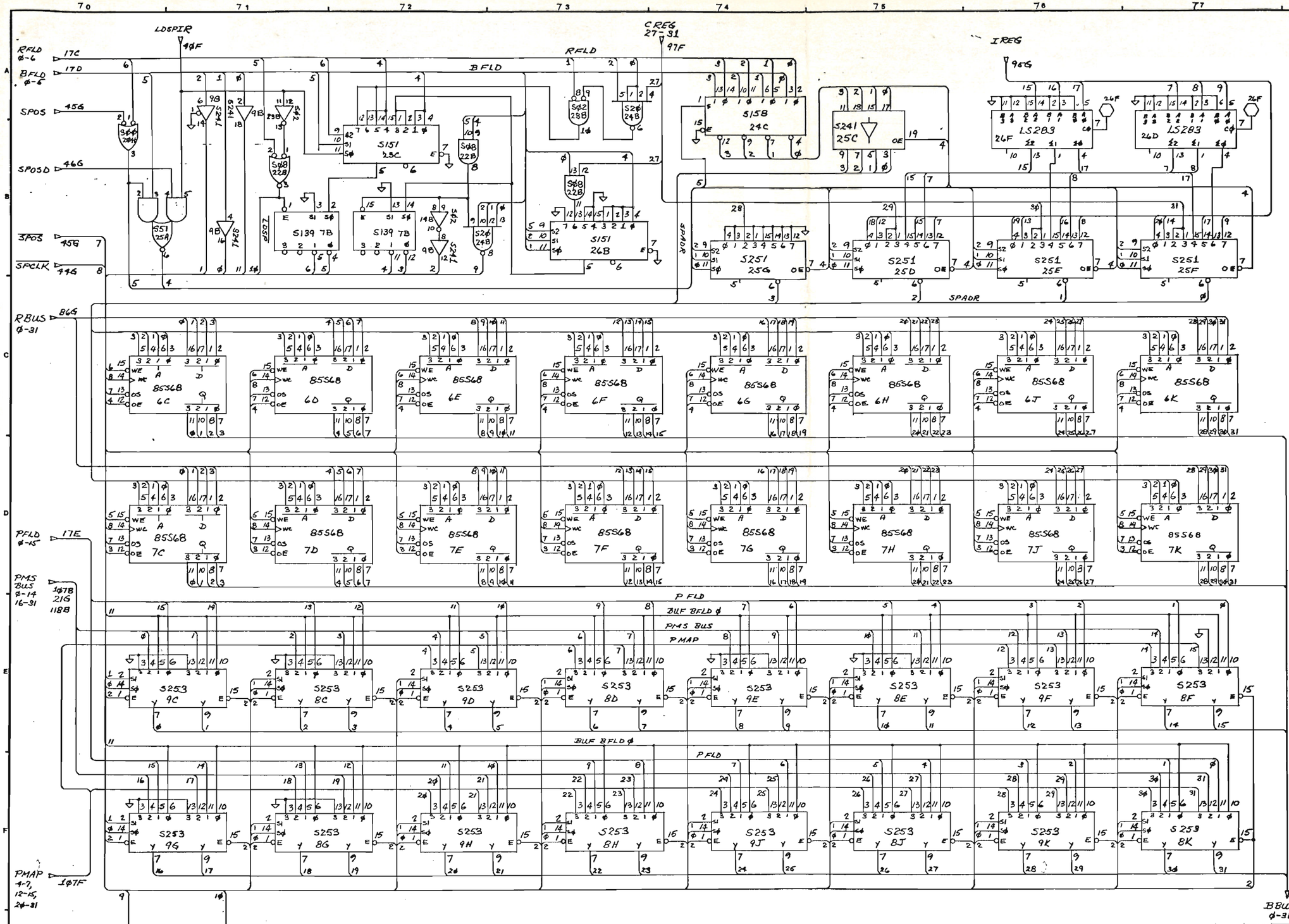

PILOT RUN COPY

ITEM	QTY.	MATERIAL DESCRIPTION	MAT'L-PART NO.	MAT'L-DWG. NO.	MAT'L-SPEC.

CONFIDENTIAL
This document contains proprietary data of BTI Computer Systems and is not to be copied or distributed without the prior written consent of an officer of BTI. Receipt or possession of this document does not convey any right to reproduce it or disclose its contents, or to manufacture, use or sell anything based on or incorporating the concepts or details disclosed in it, without the prior written authorization of BTI or BMI.

DO NOT SCALE THIS DRAWING
UNLESS OTHERWISE SPECIFIED
DIMENSIONS ARE IN INCHES
TOLERANCES .XX ± .02 .XXX ± .005

DRAWN BY	DATE	SCHEMATIC CPU3 SCRATCH PAD & B BUS MULTIPLEXER	BASIC Timesharing Sunnyvale, California 94086
ENGINEER			
RELEASE TO PROD.		NEXT ASSEMBLY	PART NUMBER 8000-5058
SUPERSEDES DWG.		FINISH — SCALE —	D8000-5058-S

REV 1 SHEET 7 OF 12

SYM	REVISIONS	APPROVED	DATE
1	PILOT RELEASE	WGUT	1/30/81

D-8000-5058-1

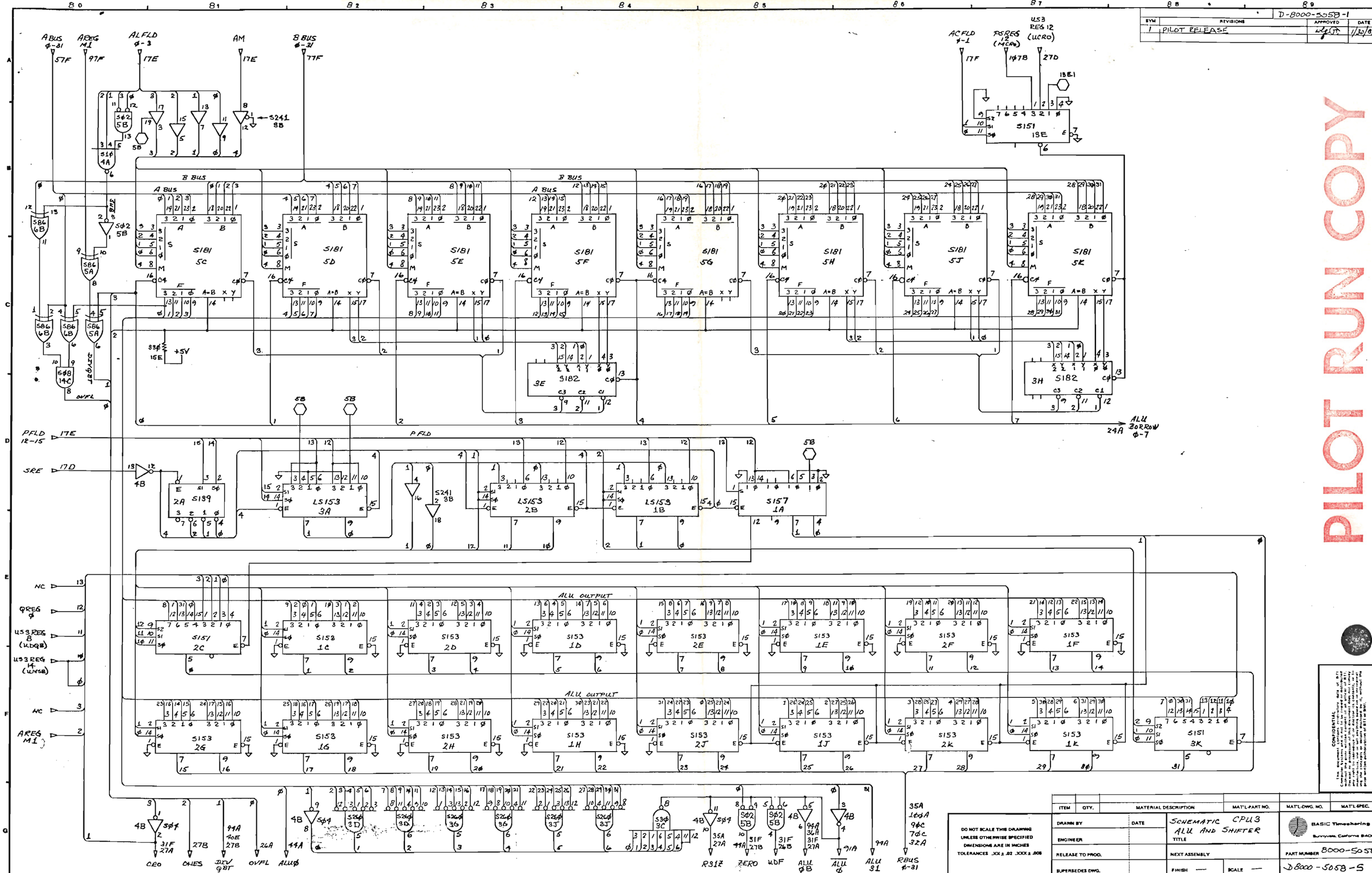
A BUS Ø-31
AREG M1
ALFLD Ø-3
AM
B BUS Ø-31
ACFLD Ø-1
PSREG 12 (MCAD)
U53 REG 12 (UCRO)
S181
S182
S151
S153
S157
S189
S241
S244
S262
S286
S2Ø4
S2Ø6
S3Ø6
S3Ø4
S4Ø4
S4Ø6
S5Ø4
S5Ø6
S1Ø4
S2Ø2
S2Ø4
S2Ø6
S3Ø4
S3Ø6

SYM	REVISIONS	APPROVED	DATE
1	PILOT RELEASE	WG/TB	12/18/80

D-8000-5058-1

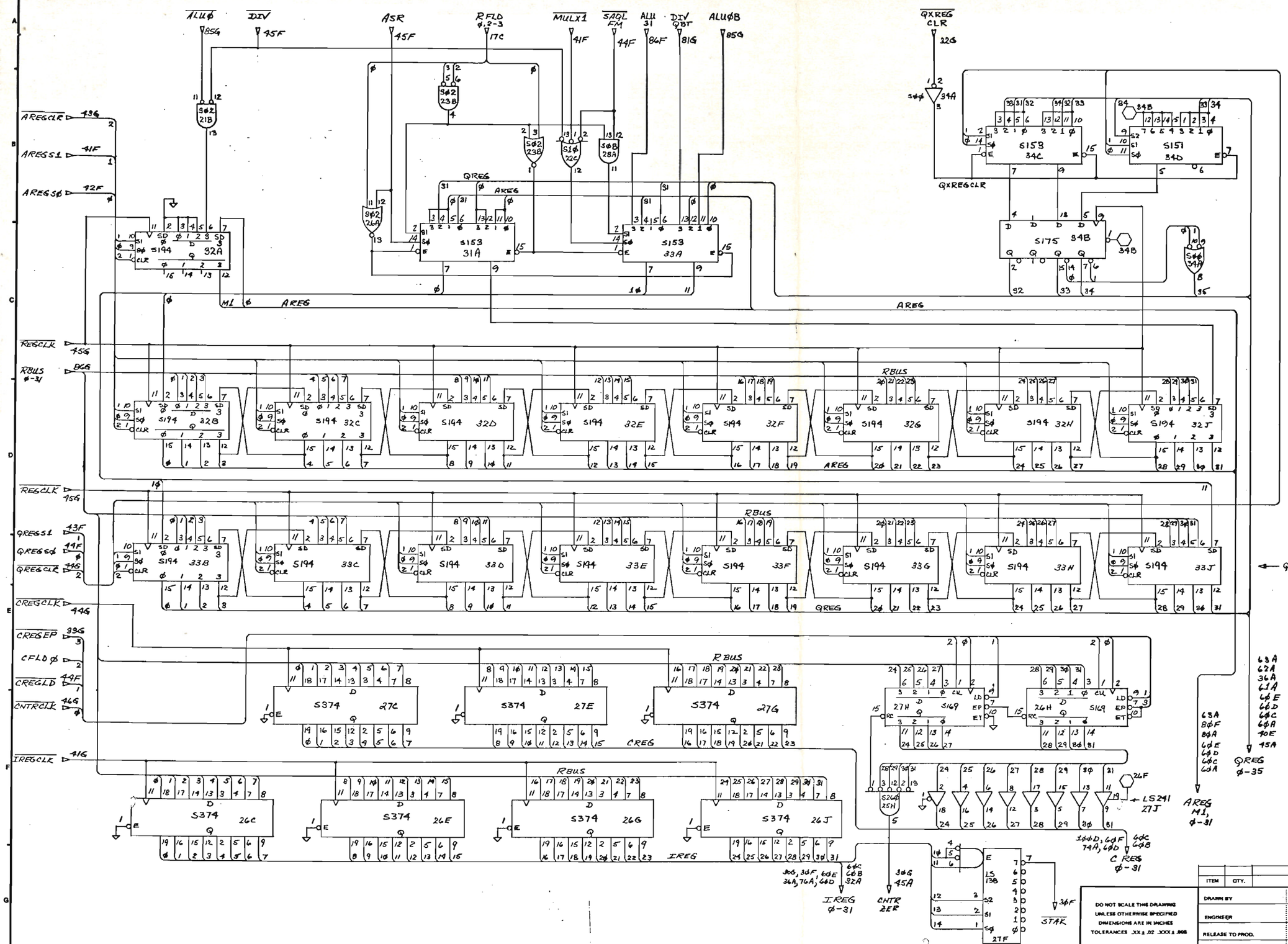

PILOT RUN COPY

CONFIDENTIAL
This document contains proprietary data of BTI Computer Systems and is not to be copied or distributed without the prior written consent of an officer of BTI. Receipt or possession of this document does not convey any right to reproduce it or disclose its contents, or to manufacture, use or sell anything based on or incorporating the concepts or details contained by it, without the prior written authorization of BTI or BMI.

ITEM	QTY.	MATERIAL DESCRIPTION	MAT'L-PART NO.	MAT'L-DWG. NO.	MAT'L-SPEC.

DO NOT SCALE THIS DRAWING UNLESS OTHERWISE SPECIFIED
DIMENSIONS ARE IN INCHES
TOLERANCES .XX ± .02 .XXX ± .005

DRAWN BY	DATE	SCHEMATIC CPU3 CPU; A, Q, C AND I	BASIC Timesharing, Sunnyvale, California 94086
ENGINEER		TITLE REGISTERS	
RELEASE TO PROD.		NEXT ASSEMBLY	PART NUMBER 8000-5058
SUPERSEDES DWG.		FINISH — SCALE —	D8000-5058-S

REV 1 SHEET 9 OF 12

SYM	REVISIONS	APPROVED	DATE
1	PILOT RELEASE	NCG (TA)	11/30/81

D-8000-5058-1

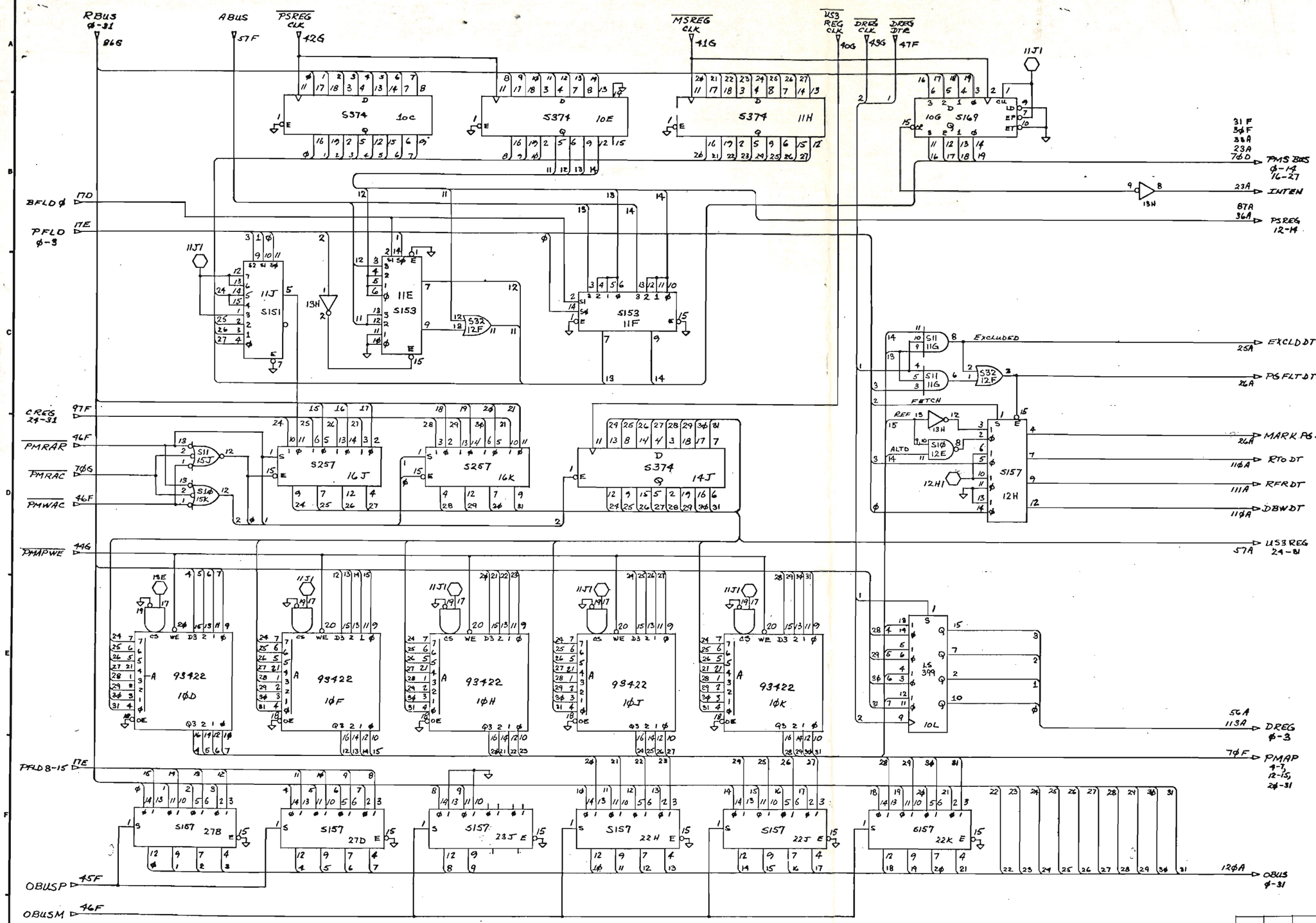

PILOT

PILOT RUN COPY

ITEM	QTY.	MATERIAL DESCRIPTION	MAT'L-PART NO.	MAT'L-DWG. NO.	MAT'L-SPEC.

CONFIDENTIAL
This document contains proprietary data of BTI Computer Systems and is not to be copied or distributed without the prior written consent of an officer of BTI. Receipt or possession of this document does not convey any right to reproduce it or disclose its contents, or to manufacture, use or sell anything based on or incorporating the concepts or details disclosed by it, without the prior written authorization of BTI or BMI.

DO NOT SCALE THIS DRAWING
UNLESS OTHERWISE SPECIFIED
DIMENSIONS ARE IN INCHES
TOLERANCES .XX ± .02 .XXX ± .005

DRAWN BY	DATE	SCHEMATIC CPU3	BASIC Timesharing Sunnyvale, California 94086
ENGINEER		TITLE	
RELEASE TO PROD.		NEXT ASSEMBLY	PART NUMBER 8000-5058
SUPERSEDES DWG.		FINISH — SCALE —	D8000-5058-5

REV 1 SHEET 1 OF 12

SYM	REVISIONS	APPROVED	DATE
1	PILOT RELEASE	WG (TB)	8/7/80

D-8000-5058-1

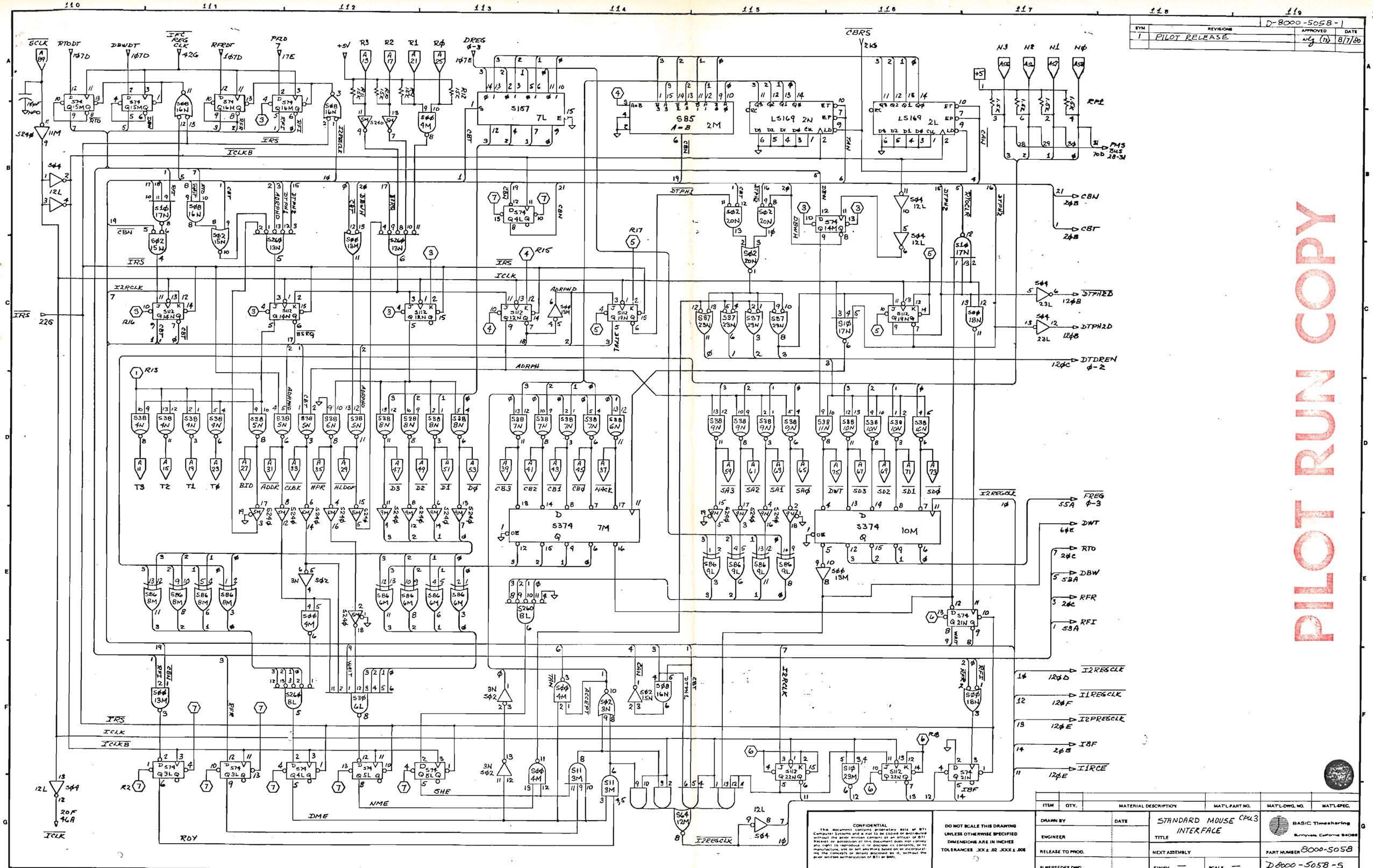

PILOT RUN COPY

ITEM	QTY.	MATERIAL DESCRIPTION	MAT'L-PART NO.	MAT'L-DWG. NO.	MAT'L-SPEC.

CONFIDENTIAL
This document contains proprietary data of BTI Computer Systems and is not to be copied or distributed without the prior written consent of an officer of BTI. Receipt or possession of this document does not convey any right to reproduce it or disclose its contents, or to manufacture, use or sell anything based on or incorporating the concepts or details disclosed by it, without the prior written authorization of BTI or BMT.

DO NOT SCALE THIS DRAWING
UNLESS OTHERWISE SPECIFIED
DIMENSIONS ARE IN INCHES
TOLERANCES .XX ± .02 .XXX ± .005

DRAWN BY	DATE	TITLE: STANDARD MOUSE INTERFACE CPU3	BASIC Timesharing Berkeley, California 94086
ENGINEER			
RELEASE TO PROD.		NEXT ASSEMBLY	PART NUMBER 8000-5058
SUPERSEDES DWG.		FINISH — SCALE —	D8000-5058-5

REV 1 SHEET 11 OF 12

SYM	REVISIONS	APPROVED	DATE
1	PILOT RELEASE		8/7/80

D-8000-5058-1

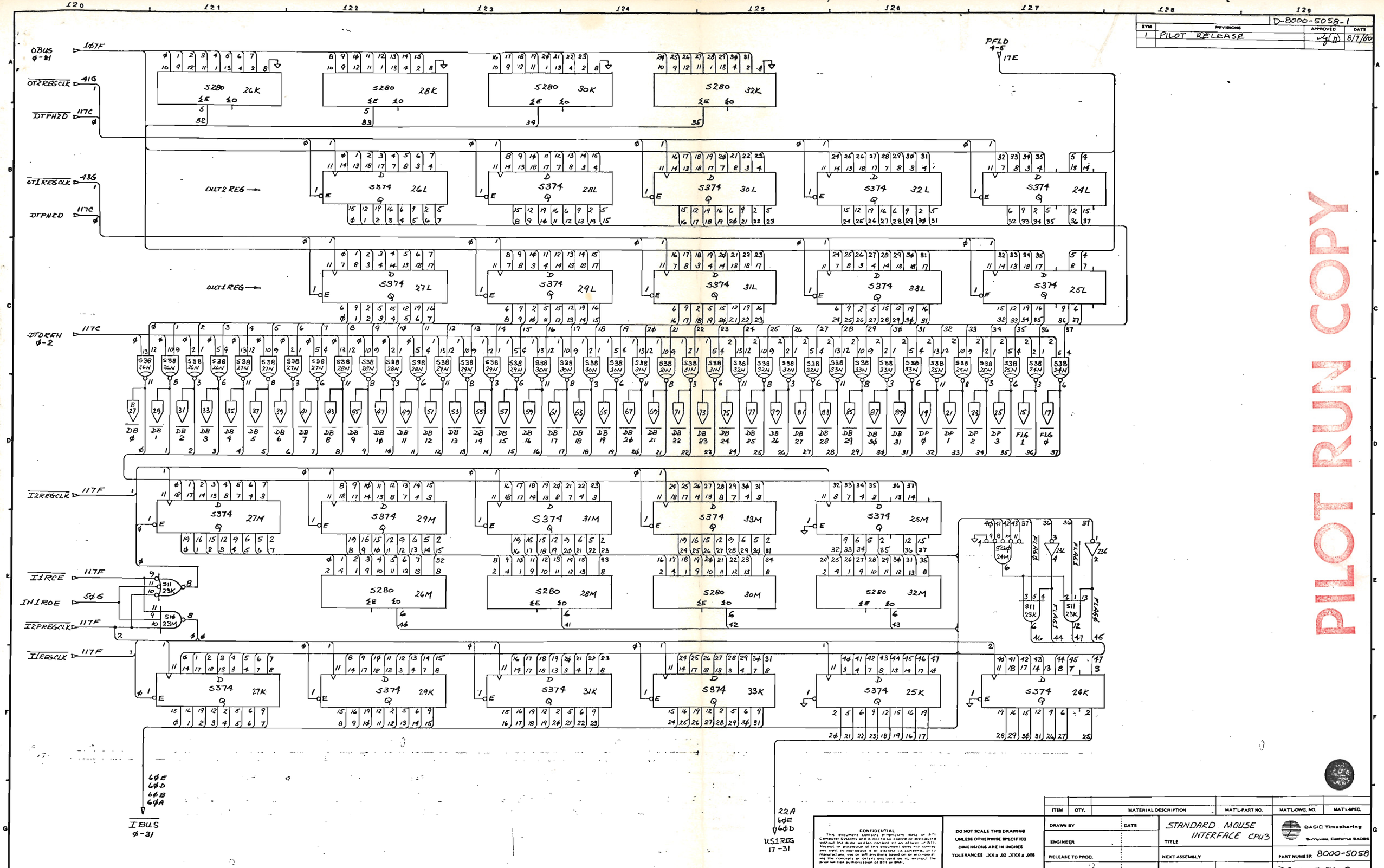

PILOT RUN COPY

CONFIDENTIAL
This document contains proprietary data of BASIC Computer Systems and is not to be copied or distributed without the prior written consent of an officer of BSI. Neither possession of this document does not convey any right to reproduce it or disclose its contents, or to manufacture, use or sell anything based on or incorporating the concepts or details disclosed by it, without the prior written authorization of BSI or BMI.

DO NOT SCALE THIS DRAWING UNLESS OTHERWISE SPECIFIED
DIMENSIONS ARE IN INCHES
TOLERANCES .XX ± .02 .XXX ± .005

ITEM	QTY.	MATERIAL DESCRIPTION	MAT'L-PART NO.	MAT'L-DWG. NO.	MAT'L-SPEC.

DRAWN BY | DATE
ENGINEER
RELEASE TO PROD.
SUPERSEDES DWG.

TITLE: STANDARD MOUSE INTERFACE CPU3

NEXT ASSEMBLY
FINISH — SCALE —

BASIC Timesharing, Sunnyvale, California 94086

PART NUMBER 8000-5058

D8000-5058-S

REV 1 SHEET 12 OF 12